Fondazione IRCCS Ca' Granda
Ospedale Maggiore Policlinico

POLITECNICO
MILANO 1863

Milano, March 31, 2020

**UPDATE April 16, 2020**
**UPDATE February 18, 2021**
**UPDATE April 24, 2021**

To Prof. Antonio Pesenti
Head of ICU, IRCCS Ca' Granda
Ospedale Maggiore Policlinico, Milano

and Prof. Ferruccio Resta
Rector of Politecnico di Milano

# Open Report about a Multiple Emergency Ventilator: Concept, Functional Design, Design of Core Parts and Control System

# Rapporto aperto su un ventilatore multiplo di emergenza: concezione, progetto funzionale, progetto delle parti centrali e del controllo

Joint Project of

IRCCS Ca' Granda Ospedale Maggiore Policlinico, Milano

and

Politecnico di Milano

Project Coordinators: Giuseppe Baselli[1], Alberto Zanella[2]

Team: Francesco Casella[1], Simone Cinquemani[3], Gianfranco Beniamino Fiore[1], Roberto Viganò[3]

1) Dipartimento di Elettronica, Informazione e Biongegneria (DEIB), Politecnico di Milano, Italy

2) Anestesia e Rianimazione, IRCCS Ca' Granda Ospedale Maggiore Policlinico, Milano, Italy

3) Dipartimento di Meccanica, Politecnico di Milano, Italy

**Contributions:** GB) first concept, functional schemes, sketches of mechanical/fluidic parts, room adaptable layouts; AZ) intensive care applications, ventilation strategies, patient side dimensions, monitoring, clinical operability; BF) concept of intrinsically safe Ppeak supplies, concept of bell-jar and pressure blower systems, principles of fluidic models; FC) system dimensioning and modelling, control strategies, dynamic simulations; SC & RV) general design and CAD of the bell-jar system, applicability of functional mechanical schemes.

## Table of Contents



## ABSTRACT

The COVID-19 pandemia is widely spreading and challenges Health Systems primarily for unforeseen need of ventilation assistance for life support of severe pneumonia patients. The ongoing effort to increase production of ventilators is the first option; however, a multiple emergency ventilator system serving 10 patients or more can be a second option to be implemented as further defense line. The core of MEV is in the intrinsically safe supply of the inspiration pressure (Ppeak), to prevent barotrauma even in a simplified system ventilating at the same pressure all patients. Two solutions are given: a) a Bell-Jar System (BJS) with water seal, the CAD design of which is also given by this report; b) a Pressure Blower System (PBS), here at the stage of functional scheme. The basic operation is by pressure-controlled ventilation for intubated, curarized patients ahead to ICU admittance. Individually adaptable Positive End Expiration Pressure (PEEP) is also guaranteed by an intrinsically safe systems (gravity sphere shutter). MEV functional design also admits enhancements towards pressure-control, volume-guaranteed strategies or even patient triggered assisted ventilation, yet requiring further complexity relevant to single patient sensors, control design, and prevention of random critical events (e.g., general flow peak due to synchronous inspiration by many patients, which the basic strategy avoids by dephasing)). The common ventilation line is a 2 inch steel pipe. This is largely over dimensioned for fluidic needs, but it works also as mechanical structure. It is modular and room adaptable in many layouts. All bedside tools (PEEP system, touch screen, patient display or monitor, distributed control sets) are mounted by a grip onto the main Ppeak distribution line.. Assembly is very rapid, with particular attention to emergency extemporaneous installations. Monitoring is limited to essential items, still providing efficient operability by Care-givers. Importantly, all designed valves and sensors are on board of the MEV system thus permitting to plug standard disposable intubation kits.

## MOTIVATION, FEATURES, POTENTIAL UPGRADES, AND ETHICAL STATEMENT

**Motivation in an emergency scenario** – The COVID-19 pandemia is challenging ICUs in more and more Countries by the unforeseen need for mechanical ventilation to support patients with severe coronavirus pneumonia. The availability of conventional single patient ventilators is running short with the concrete risk to limit proper and timely treatment to all patients. Countermeasures, so far, have been directed to increase production, design simplified models, and adapt conventional ventilators to serve two or more patients. Delays are foreseen in increased production and limits in adapted ventilators.

**Project aim** – Propose the concept of a multiple emergency ventilator (MEV) serving 10 intubated patients or more by a single $O_2$ source and distribution system. The impact should be boosted by: a) design simplicity; b) number of patients multiplier; c) adaptability to any hosting ambient; d) transportability from stock to site and from site to site. Maximum constructive, montage, and operating simplicity is assured. Nonetheless, the basic pressure-controlled ventilation permits some adjustment to single patient's needs and also upgrades to pressure-controlled, volume guaranteed strategy and even assisted-ventilation.

**Main design specifications and MEV limitations** – Intrinsic safety against ventilation pressure excess (barotrauma) is the core aim, which is implemented by two alternative solutions: a) water seal bell-jar (MEV-BJ, pressure fixed by the bell weight) and b) pressure-blower (MEV-PB, self-limited prevalence from an open inflow chamber). High tolerance to load changes, assured by oversizing of fluidic elements and feedback controls. Conversely, limits intrinsic to the parallel supply to many patients are: a) fixed inspiration pressure (Ppeak = 24 cmH2O; it can be changed, but always to the same level for all patients in a 15-30 range); b) fixed expiration pressure (PEEP = 12 cmH2; it can be changed individually by a simple manual maneuver by changing or removing the spherical PEEP shutter, range 0-20); c) fixed respiration rate (RR = 20 cycles/min; it can be changed evenly for all patients in the whole clinical range; few patients with a personalized RR can be tolerated by the INSP desync system); d) no ventilation cycle triggered by the patient (at intubation start patients are generally paralyzed); e) individual adaptation of duty-cycle (adjustable around 40% inspiration / 60% expiration, alias INSP:EXP time ratio I:E = 1:1.5) is to be studied (see the basic and the enhanced ventilation strategies below). The tradeoff is remarked between the mentioned adaptations (common or individual) and simple operability demanded by an emergency scenario, which is a concrete limitation compared to fully programmable individual ventilators.

**Main application** – The MEV equipment is primarily directed to Civil Defense (or equivalent public organizations) to provide rapid support to standard health structure. The main application case is in the emergency admission department for severe patients, ahead of ICU admission, in the case of ICU bed shortage. In the case of ventilator shortage, priority should be given to increase the number of fully equipped ICU beds and ventilators should not be stolen from the ICU for the front-end. Many hours of the MEV sub-optimal respiratory support is believed to the acceptable both on clinical and ethical considerations. In case the average pressure-controlled ventilation (with the limited allowed personalization) was well tolerated by a patient, MEV could be prolonged to the whole duration of the starting treatment under curarization. Nonetheless, MEV assisted patients should be given a standard standalone ventilator as soon as possible.

**Further application scenarios** – In the highest emergency and shortage of individual ventilators, MEV could be seen as charitable and palliative treatment, only in the worst scenario where full treatment until exitus was not feasible. A second high-emergency scenario is the assistance implemented in emergency hospitals in regions were no or few health structures were available. In

this case, adverse effects due to prolonged assistance by MEV should be attentively watched. This solution, in any case, must always be seen as the last resort, compared to full standalone ventilators.

**Ethical Statement** – The authors offer the concept, with the functional and preliminary design, to all who may implement the MEV, with proper engineering, validation, and approval of Health Authorities. All authors hope that this might be a further element in saving lives, with no competition with alternative initiatives: since a standard mechanical ventilator must always be preferred to a MEV system. Given the main and the secondary applications in the emergency scenarios said above, authors firmly refuse the idea that MEV could be developed in any part of the World as cost saving expedient. Any Country must make any effort to give a standard ventilator to anybody needing it.

**Functional scheme** (see Fig.1 MEV-BJ and 2 MEV-PB) – It includes: a) Oxygen supply from Medical $O_2$ line (primary option, if available) or (manual switch) from $O_2$ tanks; the latter to be adapted to the medical $O_2$ range (Pressure drop from 200 bar down to 2-3 bars; heating to room temperature); transportable $O_2$ production plant to be considered as further option; b) Air-$O_2$ mix calibration (50%-90% $O_2$) with temperature and humidity (close to zero) systems; dedicated or battery of single patient conditioners; c) intrinsically safe Ppeak determination (either bell jar, MEV-BJ, or pressure-blower MEV-PB, see Fig.3) d) 2 inch pipe distribution at Ppeak with a flexible layout and self-supporting mechanical features; e) bed module (220 cm) with the inspiration (INSP) branch to patient (manual shut, INSP/EXP triggered valve, INSP flowmeter $F_{INSP}$); f) Expiration set (EXP) at PEEP passively imposed by a gravity shutter sphere.

**Basic MEV – pressure controlled ventilation strategy** – The basic ventilation scheme is by pressure control, switching between Ppeak and PEEP, at fixed RR and I:E. Preset values are: Ppeak = 24 cmH2O, PEEP = 12 cmH2O, RR = 20 bpm (breaths per minute), I:E = 1:1.5 (alias a duty cycle of 40% INSP and 60% EXP) These parameters have been chosen as almost optimal for severe pneumonia patients through the starting ventilation hours under curarization. Preset values can be changed to match average features of the treated patients or even some individual therapeutic need: a) adding or subtracting movable weights over the bell of in the bell-jar system (BJS) Ppeak can cover the whole clinically applicable range (e.g. 20÷30 cm H20; WARNING: the water-seal of the BJS must be dimensioned to support max Ppeak, without gas losses); b) PEEP can be individually adjusted by changing the weight of the sphere in the gravity shutter (e.g. 0÷15 cmH2O); c) I:E can be individually programmed on the PLC (I:E 1:4 ÷ 1:1, alias INSP duty cycle 20%÷50%); d) common RR can be also changed (e.g. 15÷30 bpm); individual RR values can be also easily set (WARNING: individual RR values do not permit to dephase INSP among patients, which imposes to test the worst-case event of contemporaneous inspiration by all patients). Given the modest adaptability to patient's needs, the basic MEV configuration and the related pressure controlled ventilation is strongly suggested to be limited to the first hours of ventilation waiting for a bed in the ICU.

**Basic MEV – Pressure-controlled volume-guaranteed (PCVG) strategy by I:E (PCVG-I:E)** – The single patient control strategy can include an automatic adaptation of I:E to guarantee the patient's tidal volume (VOL, measured on the INSP side) matches the aimed volume set (VOLset) by the Care-giver. Given the pressure control only a slow adaptation of I:E should be permitted (e.g. VOL reaching VOLset in a min). WARNING: a PCVG-I:E strategy will be insufficient in patients having compromised pneumological parameters (high airways resistance, low lung compliance), since individual increase of Ppeak is intrinsically impeded by the MEV design. At VOlset reached, the INSP valve should be closed at less or more than 40% of ventilation cycle, within a limited range (tentatively, INSP min 20% ÷ max 50%, alias I:E min 1:4 ÷ max 1:1). To the best of our knowledge, PCVG-I:E is new and requires an attentive feasibility study (numerical and phantom simulation) and clinical validation.

Nonetheless, is foreseen as an important improvement of the basic-pressure controlled strategy, mainly directed to patient's safety and possibly prolonging the temporal limit of MEV treatment.

**MEVplus – Further patient's sensors and assisted ventilation** – At the expense of further complexity, **two more sensors are mandatory**: a) **EXP flowmeter, $F_{EXP}$**; b) **INSP branch pressure**, **$P_{INSP}$**. EXP branch pressure sensor $P_{EXP}$ is also recommended for PEEP monitoring**.** $F_{EXP}$ would provide the full INSP/EXP flow and volume curves on the bedside monitor, which is the common display with standard ventilators (see Fig.6). $P_{INSP}$ would greatly enhance safety and timely alarms. Based on the two further signals, the logic of assisted ventilation could be easily implemented: a) INSP started by a $P_{INSP}$ drop, signaling that the non-curarized patient is trying to inspire; b) EXP ended by timeout, or volume limit, or $F_{EXP}$ drop. The feasibility of assisted-ventilation would permit to prolong MEV treatment to the recovery phase towards normal respiration. WARNING: assisted ventilation triggered by the patient's breathing acts needs to test and dimension the MEV system permitting contemporaneous inspiration by all patients as worst-case.

**MEVdual – Individual adaptation of $FiO_2$ (inspired $O_2$ fraction, alias $O_2$%)** – The only way to safely adapt this parameter at the patient's INSP line is by **doubling the pressure control (BJS) and distribution: 1) 100% $O_2$; 2) filtered medical air $FiO_2$ = 0.2**. Both at the same Ppeak value (24 $cmH_2O$, or at the chosen level within the adaptation range). The common air distribution should also be a 2 inch pipe; however, it could a light plastic pipe (no oxygen-safe requirement), gripped to the $O_2$ steel pipe (no need for further mechanical support). The single way INSP line plug would be substituted by a gradable "Y" mixer. A local $FiO_2$ sensor is recommended. However, since the end-point is the patient's $SO_2$ grade, even manual adjustment can be hypothesized.

**Standard plug to disposable ventilation set** – Valve to patient and flowmeter were positioned in order not to interfere with a standard "Y-shape" patient intubation set, to permit the use of standard disposable sets. This imposed some limits (no valve or measure on the common INSP/EXP branch of the "Y-shape" in order to permit the use of standard patient sets.

**Detailed design and CAD for the bell-jar (BJ)** (see Fig.2) – Dimensioning of the BJ was a core issue. Dimensioning and design were the result of mechanical (construction included) solutions and system modeling and control. The result is compact, despite of about 100% volume margins, and directed to simple installation, control, and operability. Additional intrinsic safety is given by gas escapes when reaching the top range of the bell in the BJ. Visual check of proper functioning by the level of the water jacket sealing the BJ. See "General Description" Fig.2 and the specific chapter for technical details. IMPORTANT NOTE: This is not the final feasible design; nonetheless, the CAD model is ready and available as open source for the design finalization.

**Detailed modeling and control project** – Modeling accounted for the critical fluidic components, thus allowing to include dynamics evaluations in dimensioning the BJ and the main valves (central controlled valve. Both average and worst-case operative conditions were checked. Number of sensor and actuators reduced to the minimum in the sake of constructive simplicity and operative robustness. See the specific chapter for technical detail. IMPORTANT NOTE: The system/control model is ready and available as open source for the design finalization; it is implemented in the "Modelica" language and runs in the open-source OpenModelica software.

**Mechanical structure (**see Fig.4) – The main 2-inch pipe has both the function of gas distribution (largely over dimensioned, with negligible pressure drops from Ppeak) and self-sustaining mechanical structure. It will be fixed at 160 cm above ground level by poles gripped to the pipe at adaptable points (1 pole per patient module, plus poles for the connection pipes). A height of 160 cm is the best compromise between operability of element attached to (INSP line) or gripped onto

(EXP line and PEEP system, display or monitor, local CPU) the pipe and visibility in the case of high bed heads. For ergonomics, INSP/EXP plugs, handles, and displays are right-side the bed.

**Layout** (see Fig.5) – Maximum layout flexibility is obtained by a cross-shaped central connector, permitting many layouts by 1 to 3 bed arrays: 1) linear; 2) L-shape or T-shape; 3) clover-shape. The main and optional elements (see Fig.4) are modular, thus allowing adaptation to any room. Insertion of safety elements (shut, water-traps) in many points is strongly recommended, for safety and easy maintenance or lay-out modification.

**Display or monitor** (see Fig.6) – A minimal option by a display of ventilation parameters (setting and measured) is mandatory. An improved option by a signal monitor is encouraged, if compliant with the required MEV essentiality. Attention was given to the display standards in the ICU. Importantly, all bed-side equipment (display/monitor, touchscreen, bedside-μProcessor) will be gripped onto the main 2 inch pipe at 160 cm height, thus avoiding furniture or dedicated supports.

**Engineering and open issues** – Most of the engineering and technical design is still to be done. Technical choices should follow the strategy of choosing ready on the market components (e.g., lent by industrial plants) with highest priority to medical grade parts (e.g., lent by conventional ventilators and/or hospital plants). Such choices are likely to deeply influence the final overall design, with significant changes to the actual concept and feasible design. The following should be considered:

a) supply from $O_2$ tank requires to go back to obsolete in-room systems which actually worked decades ago; safety distance of $O_2$ tank stock and pressure reducers is strongly recommended;
b) $O_2$/air mixer and conditioner; medical grade would be mandatory and gas conditioners designed for 10-fold volumes unlikely exist; a parallel battery of 10 single patient conditioners could be an option in place of a new system developed expressly for MEV;
c) the bell-jar system (BJS) is now describe by a detailed CAD (see specific chapter), nonetheless a detailed analysis of materials and a design refinement is needed;
c-bis) the pressure-blower system (PBS) in the MEV-PB (alternative to BJ) is presented at functional principle level and requires quantification and engineering
d) main steel pipes and valves can be taken from industrial components, after proper approval;
e) INSP and EXP valves and sensors are likely to be available among standard ventilator components;
f) the optional addition of further sensors (air-ways-opening Ppeak and EXP flowmeter) and control (patient's VOL limitation at desired value VOLset) should be considered in their cost/benefit tradeoff, where cost is not money but higher complexity;
g) the system/control interaction model is ready and was simulated on average and worst-case conditions; however, technical adaptations might require further simulations; additional simulations on random application cases (mainly, patient's number and features) are also suggested and easily implemented by trivial customization of the existing simulation model;
h) the electronic control system needs proper design; a tentative configuration is given by a master Programmable Logic Controller (master-PLC) for the control of the core elements and to communicate with bedside-μProcessors. To be decided between a distributed logic (master-PLC + many bedside-μProcessor, see Fig.6) or a centralized logic (master-PLC and μProcessor, only, possibly doubled for safety). Bed interface logic (display/monitor and touchscreen drive) is also needed (not shown in Fig.6).

## GENERAL DESCRIPTION AND FUNCTIONAL SCHEMES

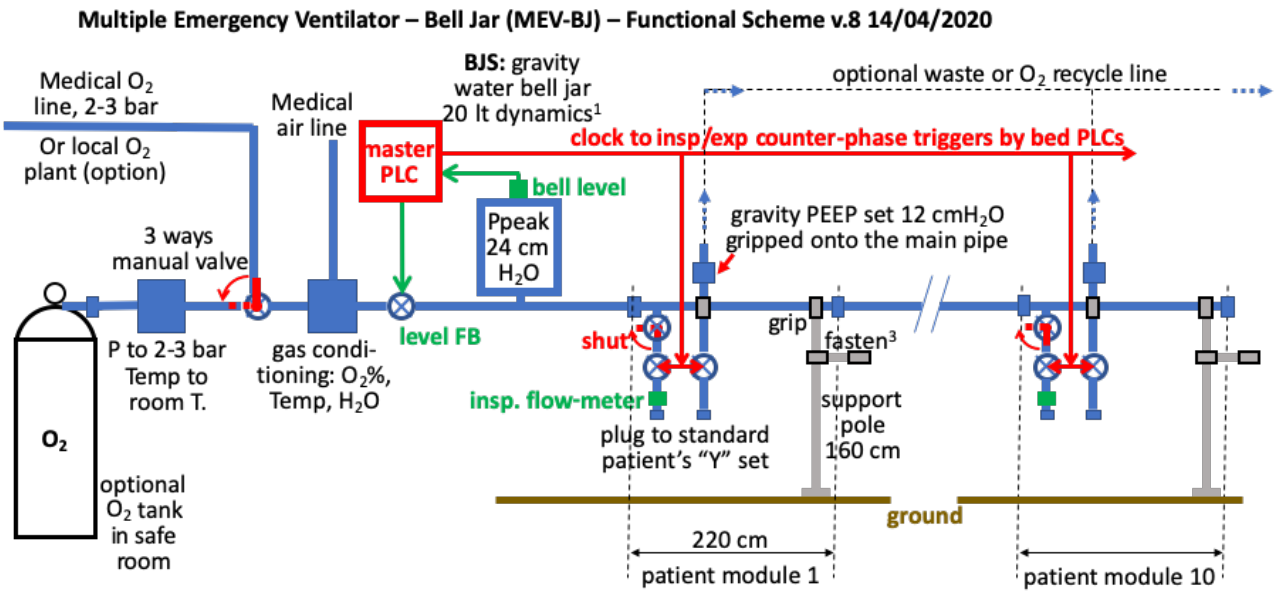


1) Cylinder height = 24 cm (Delta outer – inner water jacket) + dynamic range + margins. Overflow safety system.
2) PEEP expiration valve with spherical shutter; weigth calibrated to PEEP = 12 $cmH_2O$; horizonality bubble
3) Fastening: adaptable length; plug to wall or to patient's bed

***Fig. 1 – MEV-BJ: Multiple Emergency Ventilator with Bell-Jar-System (BJS). Functional scheme.***

Oxygen supplies can be either the Medical $O_2$ line (when available within or nearby an Hospital) or liquid $O_2$ tanks. The latter case requiring the specific system for pressure drop to 2÷3 bar and gas heating to room temperature. A manual three ways valve should be mounted to switch to either supply in case of need. Proper protections against $O_2$ tanks accidental break-downs or detachment must be foreseen (distance from patients and personnel and/or dedicated stocking rooms).

Gas conditioning should be medical grade permitting the needed $O_2$%, controlled temperature and humidity. This specific applications is likely to require high $O_2$% (50%÷90%) and does not permit differentiation of single patient's supply. The construction of a 10-fold volume conditioner is needed; however, a parallel battery of 10 single patient conditioners can be a safer and easier option.

The bell-jar system (BJS) safely keeps Ppeak independently from the bell hight; nonetheless a feedback (FB) on bell level to be kept by the mid of bell dynamic range (20 lt) is needed. See the modeling/control chapter for details. See Fig.2 and relevant text for the main BJS and water seal features. See also the detailed design of the BJS in the dedicated chapter.

The main pipe has a 2 inch diameter to provide also a mechanical structure. Special connection pieces will permit to compose the needed layout (see Fig. 5), with 1 to 3 lines of beds. Each bed module is served by a 220 cm pipe segment. The INSP pipe (1/2 inch) is at the right side of the bed (entering side of the gas, male connector) for ergonomics (left hand on maneuvered tools, right hand by the patient).

Each pipe segment is also used to grip the bed tools (see Fig.4) and the support pole, that fixes a 160 cm height of the pipe (not too high for maneuvers of gripped tool and valves, but clear from bed head structure). Supporting poles can be either gripped to bed structures (e.g., in a tent) or fixed to the wall behind (e.g., installations inside hospital or any building).

The master PLC performs the main controls (e.g., the FB on bell level). The main operation of bedside controllers will be switching between INSP and EXP by two counterphase valves on the respective valve. This solution was chosen to leave the "Y" connection of INSP and EXP lines to the intubation limb free and implemented by the disposable intubation kit. Volume dimensioning was performed assuming that the common clock imposes a common RR and full patient dephasing: a 36° phase shift of 10 patients over the 360° cycles; i.e., a delay of 300 ms, with RR = 20 bpm.

The actual dimensioning of 20 lt dynamic range within the BJS gives about a 100% margin to the flow delivery power in dephased condition. Individual I:E adjustments do not cause significant deviations from the even volume dynamics imposed by dephasing. The worst-case condition of full synchronization, conversely, does bring the MEV-BJ close to its regulation capacity during the simultaneous INSP phase. In conclusion, relaxing the dephasing condition by either individual RRs or patient triggered assisted ventilation would be require one or more of the following countermeasure: a) increase the BJS margin (i.e., size); b) enhance the common controlled valve dimension (now 4 lt/s max flow) and its response speed; d) limit personalization to few patients; e) limit the total number of patients attached to MEV. A practical implementation of both (a) and (b) would be to double the BJS and its FB supply valve in parallel.

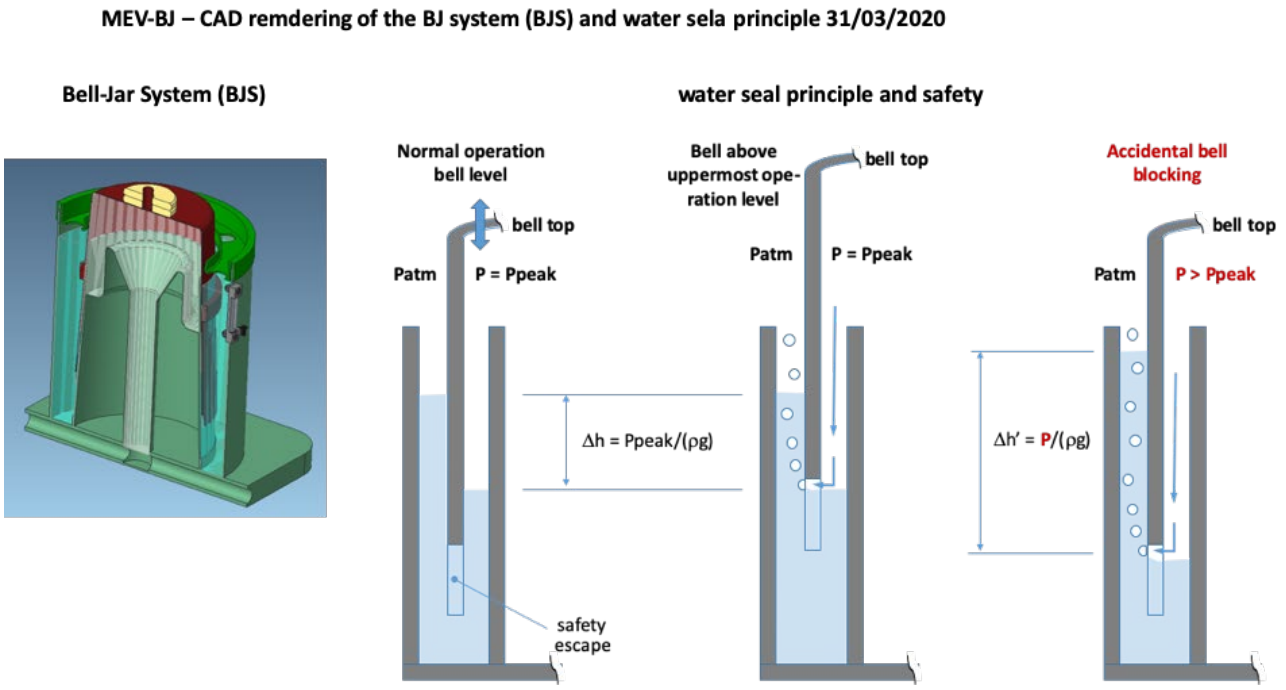


***Fig. 2 – Left) BJS CAD rendering; moving bell in red. Right) principle of water seal. From left to right: correct operative condition, with perfect air tightness; excess of volume at top of dynamic range opens the air escape holes at bell lower border; air escape will limit Ppeak excess even in the highly improbable case of an accidental bell blocking. The mild conicity of the bell is to avoid its blocking.***

Fig. 2 (left) represents a CAD rendering of the Bell-Jar System (BJS) in a general working configuration. In its minimum volume configuration the system guarantees approximately 15.3 liters of oxygen, in the maximum volume configuration approximately 35.3 liters: 20 lt dynamic range.

The water seal (Fig.2 right) does both avoid sliding and guarantee air tightness. Sliding is further avoided thanks to the conical shape of the surfaces.

Ppeak is intrinsically fixed by the bell weight (23 kg). Fixed massive bell parts are in its lower part to enhance stability of bell axis verticality. Removable weights (yellow) are added on top to reach the preset target Ppeak = 24 cmH2O. So, the BJS Ppeak is easily changed by subtracting or adding movable weights.

Further intrinsic safety is assured by the air escapes at the lower bell border which permit oxygen to bubble out both when FB was not able to keep the bell below its maximum range limit and in the highly improbable case of bell blocking.

Easy start-up water filling and periodical refilling are assured by the removable cylinder cover. Visual control of water level is permitted by the transparent plexiglass outer cylinder.

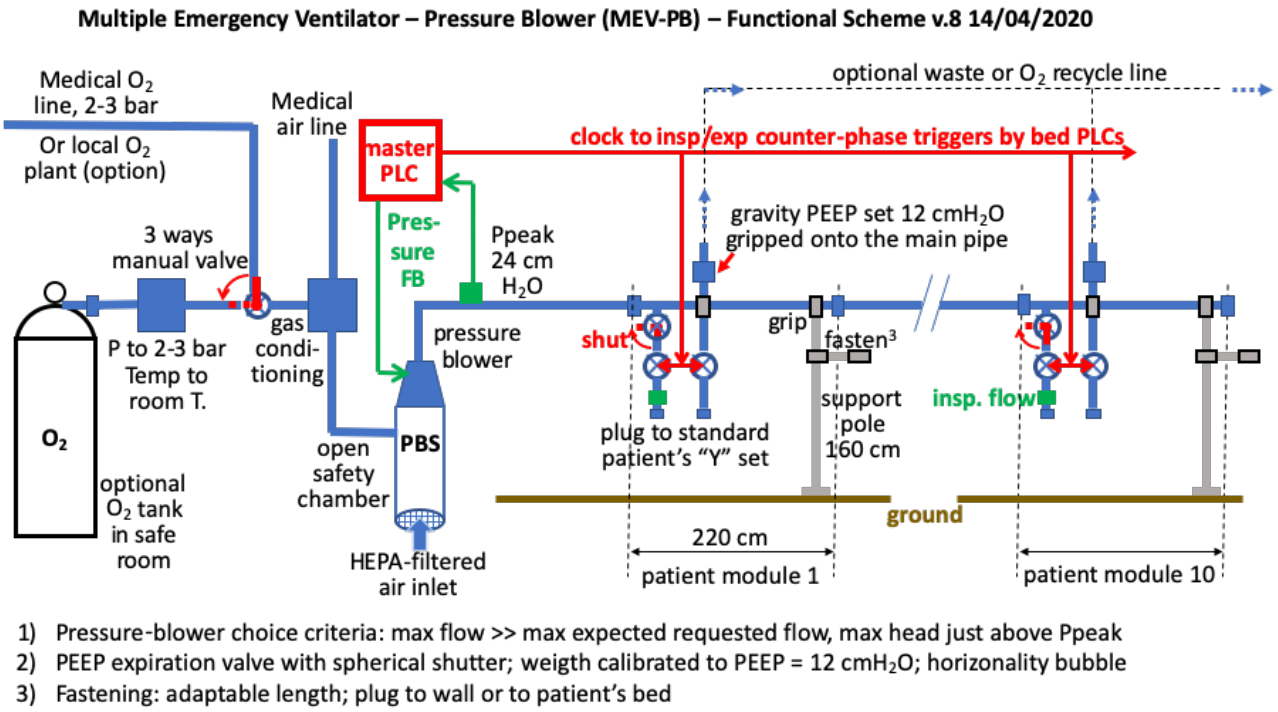


***Fig. 3 – MEV-PB with Pressure Blower System (PBS). Functional scheme.***

The only difference from MEV-BJ (Fig.1) is the core intrinsically safe generation of Ppeak. The Pressure-Blower System (PBS) is formed by a blower (fan or small turbine) characterized by prevalence saturation slightly above the nominal Ppeak value. Also, the oxygenated mixture is filled in an open chamber at approximately atmospheric pressure. Thus, dangerous Ppeak values will never be reached even in the worst case of pressure FB breakdown.

The oxygenated air distribution parts are shown in Fig.4. The main elements are the INSP line from main 2 inch steel pipe to patient and the EXP line form patient to waste or recycling systems (optional). The INSP ½ inch line is shown in its minimal configuration, including: a) screw plug (female) to main pipe; b) manual shut valve (red handle) to close at patient detachment (WARNING: EXP line accidentally open to atmosphere would cause a loss of 2 lt/s, still keeping Ppeak but with no margin); c) EXP valve of the EXP/INSP counterphase system; d) the patient EXP flowmeter (positive half of the pneumotachograph signal); e) the one-way (no-return) valve, inserted to reduce cross contamination from one patient to that attached at a later time (cross-contamination among contemporaneously ventilated patients already impeded by Ppeak drop); f) standard 22 mm female

plug to patient ventilation kit, removable for maintenance and substitution by adapters to different standards.

The EXP ½ inch line includes (from air inlet at the bottom): a) 22 mm female plug to intubation kit (removable); b) no return valve against cross-contamination over time; c) a passive PEEP system calibrate by the weight of the spherical shutter. The last solution was preferred to a water column system, for efficient montage and maintenance. A set of spherical shutters with different weights should be provided to change PEEP by a simple manual operation. The EXP set is mechanically gripped onto the main pipe as any other bedside equipment.

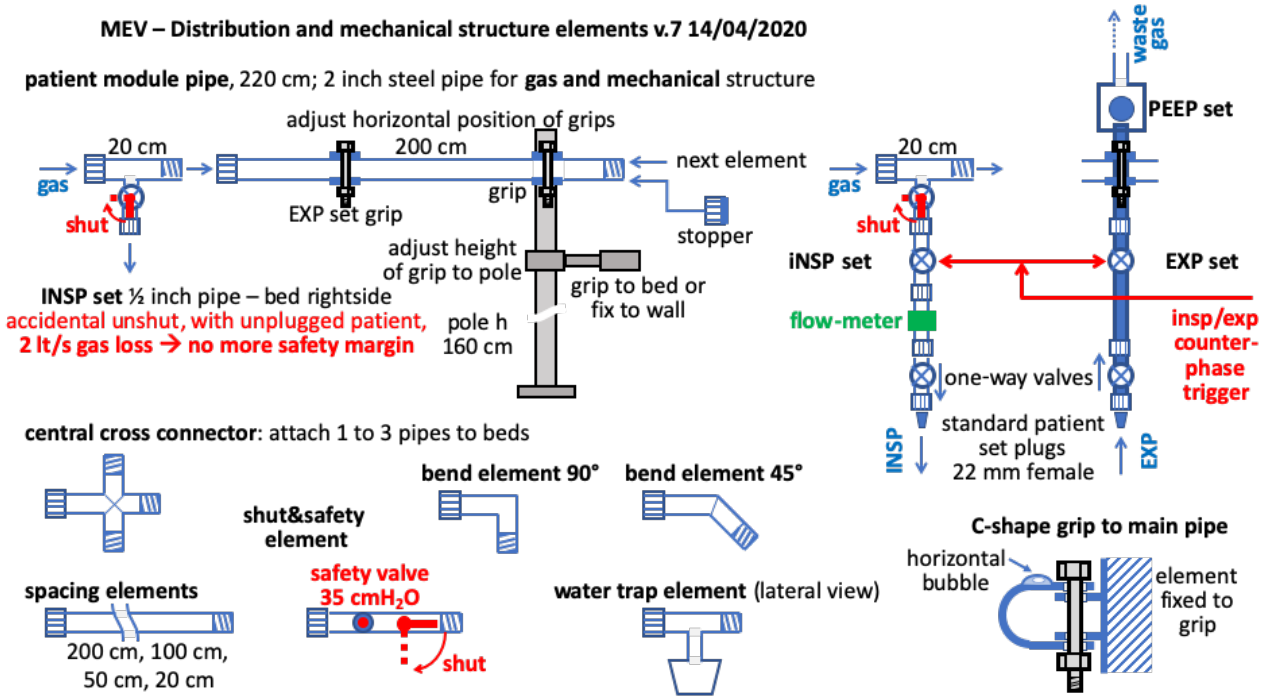


***Fig. 4 – Distribution and mechanical structure elements. Out of scale functional schemes.***

Fig. 4 also highlights that the 2 inch pipe oxygen distribution system also has self-standing mechanical properties and permits gripping all bedside movable parts. The main piece is the patient module. 220 cm is chosen to permit easy access to the bedside (principally the right one), allowing at least 110 cm from bed to bed, even with complex ICU beds. A quote fixed at 160 cm over the ground assures both ease of maneuver on gripped on components as well as maintenance operations and visibility, avoiding occlusion by the bed-head structure.

Elements are screwed together by gas attachments, with the general rule that gas flow direction enters the female side, for easier addition of further elements and montage of end the end-of-line stoppers. Several special small size (20 cm) connectors are added (Fig.4 bottom-left corner) to permit flexible layouts (see Fig. 5), manual shutters for emergency or maintenance of isolated segments. Insertion of shutters at the start of each distribution limb is mandatory. Insertion of further ones any 2-3 beds is strongly recommended. The main element is the central cross connector, which allows layouts with 1, 2, or 3 limbs (see Fig.5). A water trap is strongly recommended at least at the start of each limb, to avoid moisture to incidentally enter the patients' INSP lines.

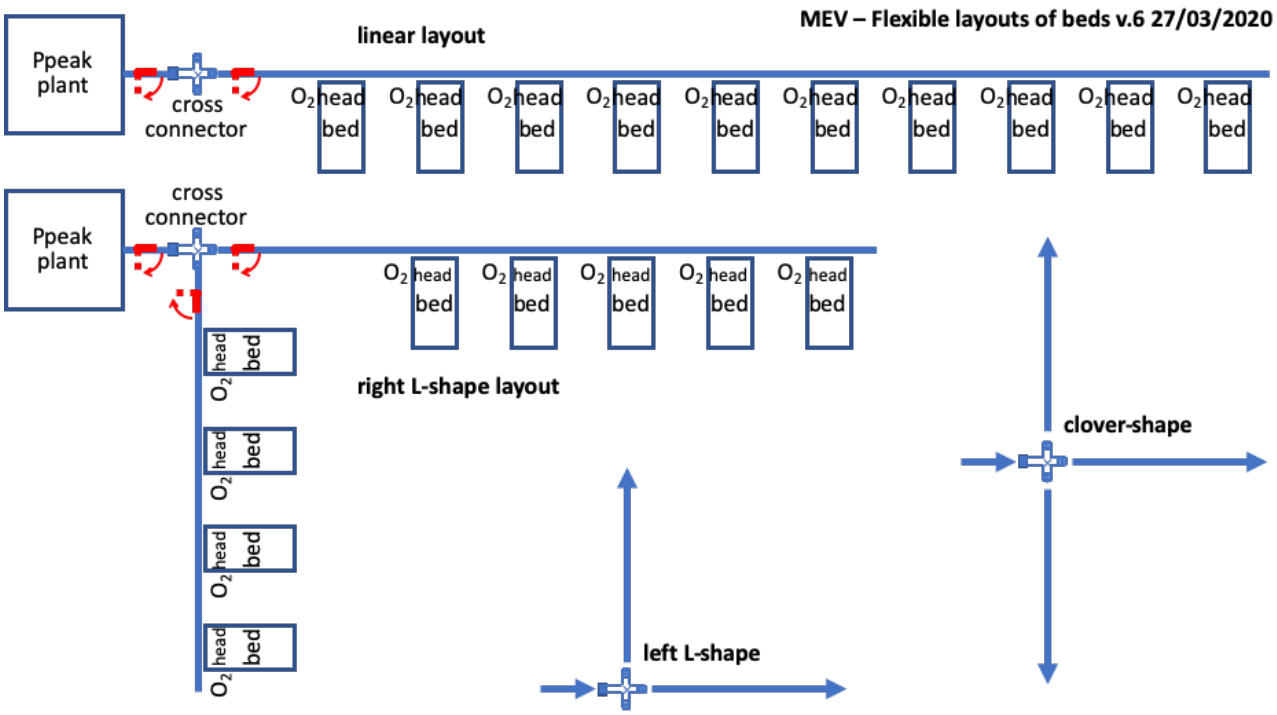


*Fig. 5 – Layout examples: the central cross element permits 1, 2, or 3 limbs*

Examples of the main allowed layouts are shown in Fig. 5. This feature permits to adapt the MEV distribution system to any room or tent dimension from square to long and narrow. Straight 2 inch pipe modules (e.g. 1 or 2 m each, not shown) should also be furnished to adapt the distance from the core parts to the bed rows.

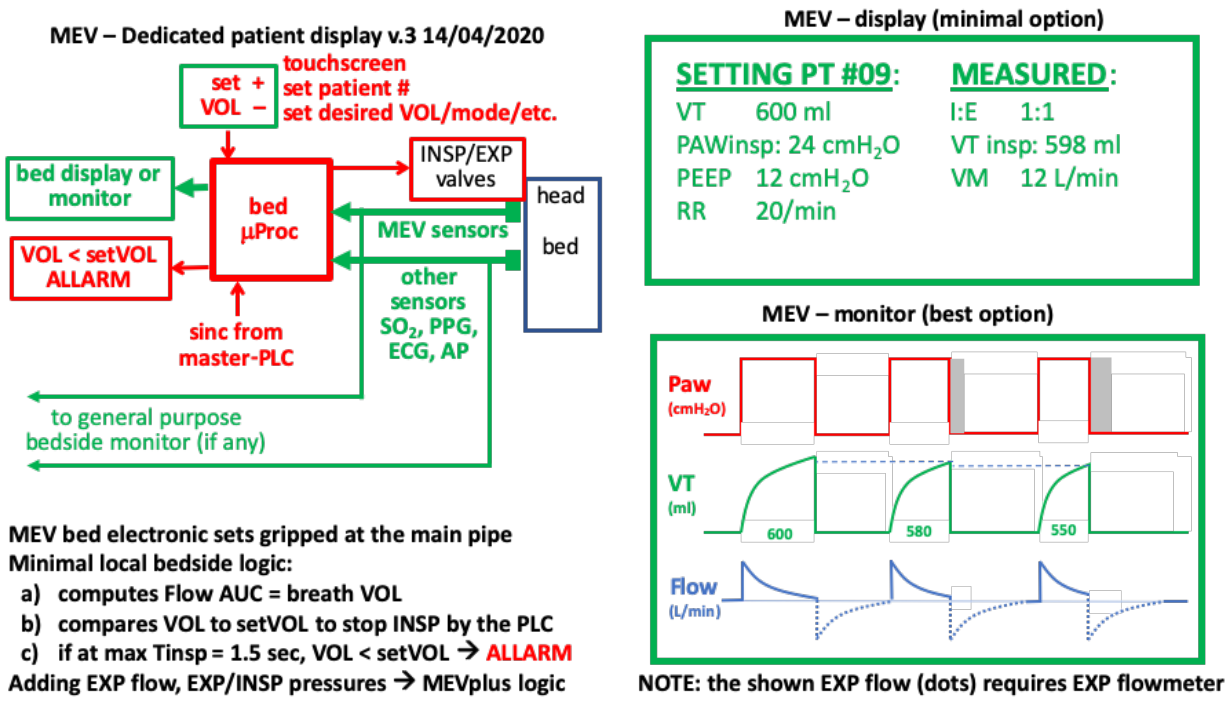


*Fig. 6 – Bed-side electronics and display or monitor*

Individual bedside monitoring is mandatory and the foreseen displays are shown in Fig. 6. They were designed to match the standard views given to intensivists in a common ICU, even in the **basic MEV**

configuration. **MEVplus additional sensors** would provide a more complete monitoring (display) of ventilation parameters.

Importantly, in the hypothesis of the availability of a standard ICU monitor, ventilation parameters would be doubled to this device, for integrated view.

Conversely, in the hypothesis of the lack of a full ICU monitor, in emergency environments, the bedside-μProcessor could easily integrate at least the minimal set of other ICU monitored parameters: ECG, PPG, invasive/non-invasive arterial pressure (AP); $SO_2$.

**In such configuration, MEV would surrogate both the standard ventilation therapy and the standard ICU monitoring.**

## Detailed CAD of the Bell-Jar System (BJS)

The Bell-Jar system has been designed in order to guarantee the function required in a compact and flexible manner and, at the same time, to permit a simple and easy manufacturing. This has been obtained reducing the number of the assembly parts and their shape.

Figure 3 represents the device in a general working configuration, while Figure 7 and Figure 8 shown the Bell-Jar system at lower and top working positions. It is mainly composed of a fixed part (BJ_BODY in Figure 9) and a Bell-Jar (Figure 9) capable of moving along the vertical direction.

In the fixed part, connections are provided for the inlet and outlet oxygen (towards the patients).

A channel connects the line with an accumulator whose volume can vary depending on the requests downstream of the line, while the pressure is kept constant. In its minimum volume configuration the system guarantees approximately 15.3 liters of oxygen, in the maximum volume configuration approximately 35.3 liters.

The bell-jar is separated from the fixed structure by a water seal which guarantees the pressure inside the chamber avoiding sliding (and therefore overpressure) between the moving parts. Sliding is further avoided thanks to the conical shape of the surfaces which guarantees a rapid detachment during operation.

The system is sized to accommodate oxygen at a nominal pressure of 24 cmH20. This pressure can be easily adjusted by adding or removing calibrated masses placed on the upper part of the bell-jar (BJ_MASS in the Figure 3) accounting for a total mass of 28 kg. The mass distribution of the bell is such as to ensure that, in any position, its center of gravity is always placed below the water level, so as to guarantee perfect stability of the bell during movement.

A cover is provided on the fixed part of the device with the dual purpose of preserving the liquid and operating as a mechanical constrain to the bell stroke (approx. 175 mm) reached in the maximum volume configuration.

In this configuration, a further safety shrewdness to avoid overpressure is obtained by creating some slots at the bottom of the bell-jar that allows the oxygen to go out the inner chamber thus reducing the oxygen pressure.

A sensor placed on the fixed part is capable of detecting the quantity of liquid available and indicating the need for refilling.

The CAD model of the Bell-Jar system designed has been conceived to permit an easy extraction of the whole information need for the construction of the system and it is also able to integrate with the requirements of diverse manufacturing technologies.

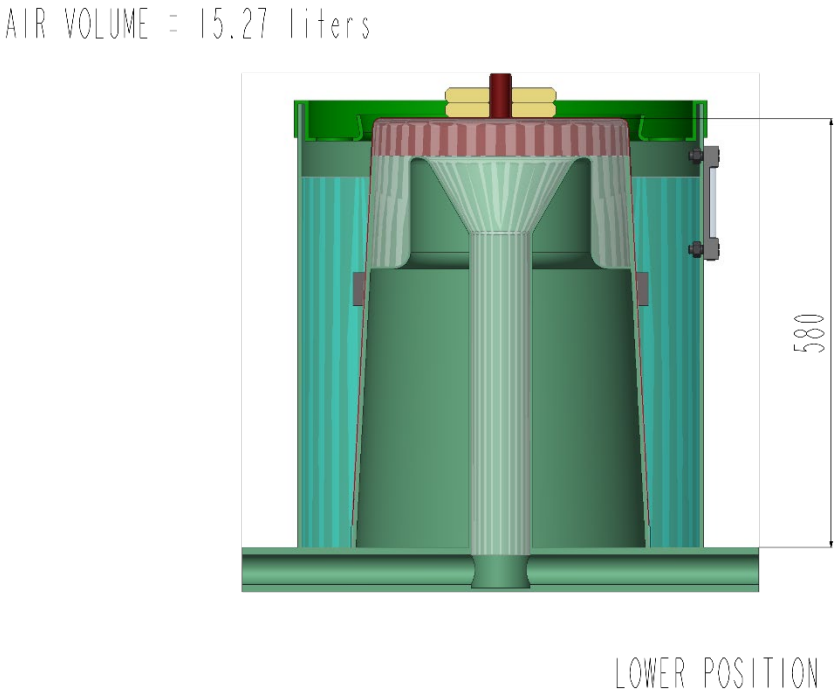


***Fig. 7 – Bell-Jar at the lower working position.***

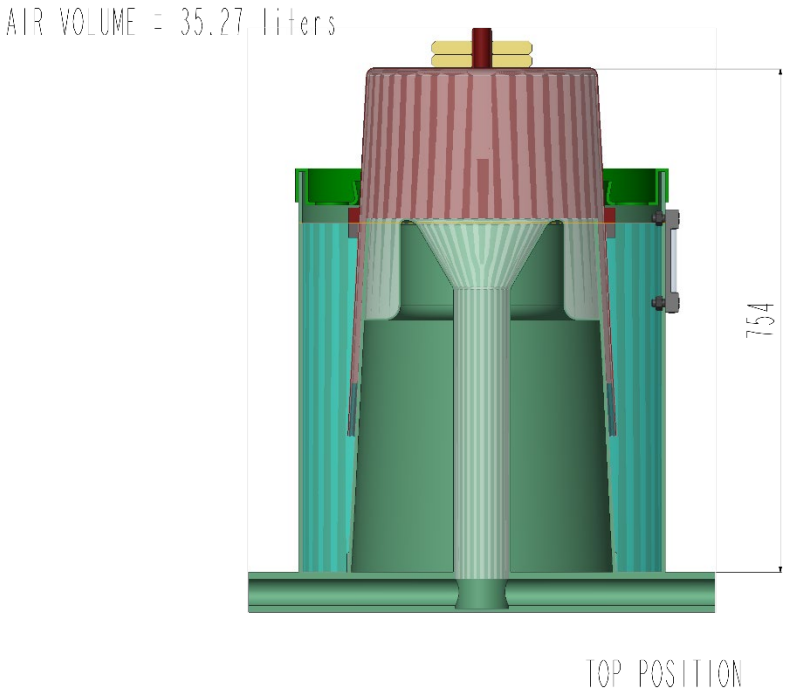


***Fig. 8 – Bell-Jar at the top working position.***

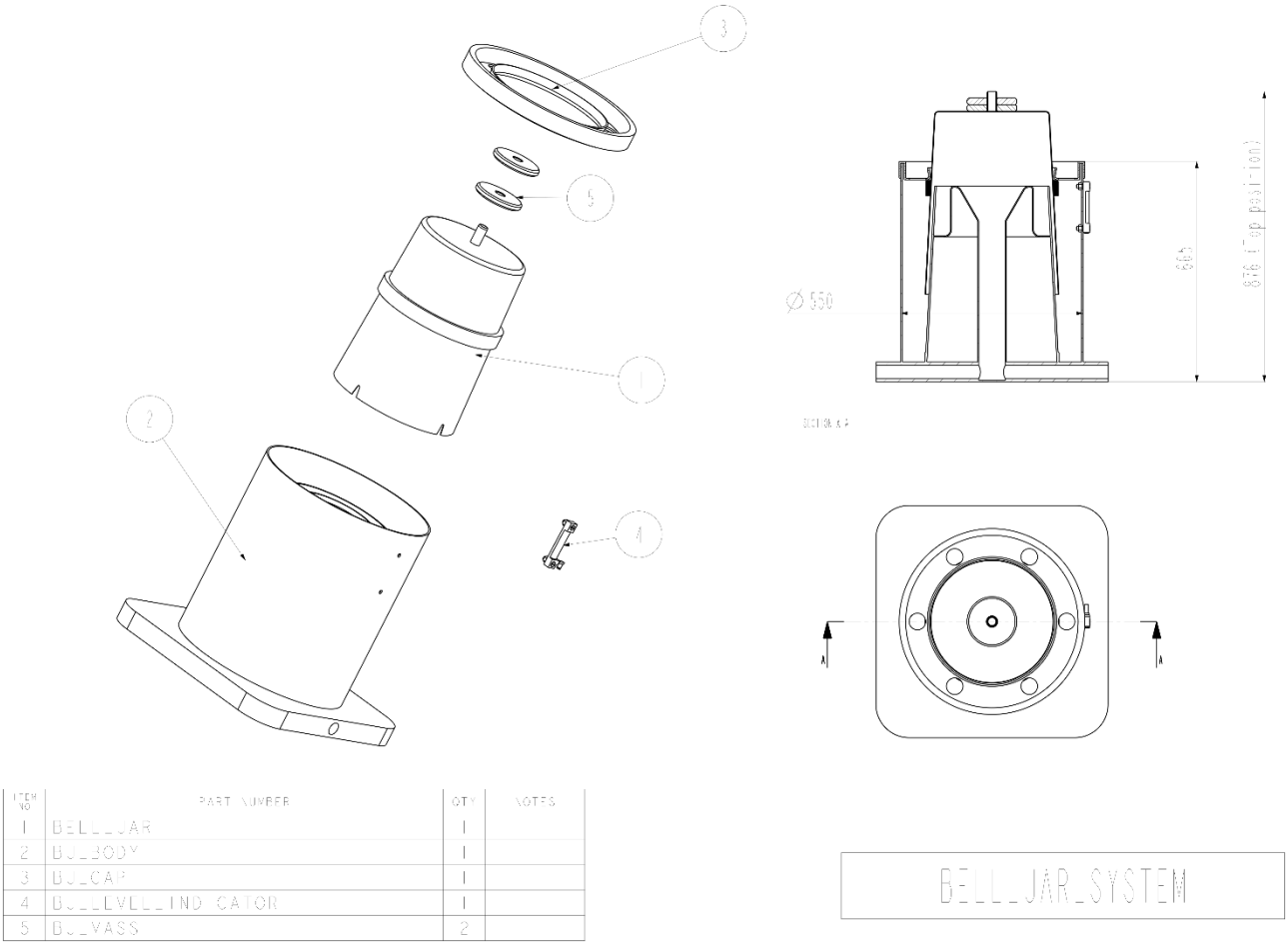


***Fig. 9 – Exploded and assembly views of the Bell-Jar system.***

## System dynamic modeling and detailed control design

The basic working principle of the multiple ventilator is to provide steady pressure conditions on the supply pipe at each patient's bed. This allows to provide pressure control ventilation by means of properly timed on-off valves serving each intubated patient.

Steady pressure conditions are primarily provided by the bell jar, which acts as a constant-pressure, variable-volume oxygen reservoir, pressurized by gravity. Whenever there is an imbalance between the supply flow from the $O_2$ source and the flow towards the patients, the bell moves up and down, while maintaining a constant pressure, corresponding to the weight of the bell divided by the area of its horizontal cross section. When the bell is accelerated or decelerated, over- or under-pressure transients are expected; however, simulations show that this effect is negligible. Furthermore, the gravity-generated pressurization mechanism is inherently safe against excessive pressurization in case of failures, which could cause barotrauma in patients. The 2-inch diameter supply pipe is also very generously sized with respect to pressure losses, which are then also negligible.

The first control function is thus to keep the level of the bell close to the mid-point between the upper and lower position, in order to provide a buffer against the flow imbalance. This is achieved by regulating the flow of oxygen from a medium-pressure supply at 2-3 barg into the bell by means of a control valve. The primary control function is provided by a modulating valve driven by a linear controller. A backup function is provided by an on-off valve mounted in parallel, thus ensuring low-cost redundancy against the failure of the primary actuator.

The system is designed to handle 10 patients; each patient is expected to perform between 14 and 30 respiratory acts per minute, breathing between 0.2 and 0.5 liters of $O_2$ per act, depending on their clinical condition. The maximum sustained flow is expected to be about 1.7 l/s. In order to provide ample safety margin, and also the possibility of attaching more than 10 patients in cases of emergency, the control valve was sized to obtain a volume flow at atmospheric pressure $q_{des}$ = 4 l/s, when the supply is at the minimum value of 2 barg. This corresponds to a flow coefficient $K_v$ = 0.2 m3/h.

The bell jar has a useful volume V = 20 l between the lower and upper position, with a cross-section area A = 0.115 $m^2$ and a stroke of 170 mm.

The transfer function from the valve opening to the bell level can be approximated as:

$$G(s) = \frac{\mu}{s\left(1 + \frac{2\xi}{\omega_n} s + \frac{1}{\omega_n^2} s^2\right)}, \qquad \mu = \frac{q_{des}}{A}, \qquad \omega_n = \sqrt{\gamma g \frac{A}{V} \frac{p_{atm}}{p_{rel}}}$$

where $p_{atm}$ is the absolute atmospheric pressure, $p_{rel}$ is the relative pressure under the bell, $g$ is the acceleration of gravity, and $\gamma$ = 1.4 is the ratio $c_p/c_v$ of oxygen. The natural frequency of the oscillations, which are induced by the coupling of the bell inertia with the spring behaviour of the gas, is around 50 rad/s, which two orders of magnitude larger than the crossover frequency, so that even a moderate damping coefficient is enough to avoid high-frequency unstable oscillations. Damping is provided by all dissipative phenomena in the system, i.e., the viscous friction of the liquid layer surrounding the bell jar, and the flow of air through the control and supply valve. Hence, a lower damping is obtained when fewer patients are connected, because of the lower dissipation of the smaller valve flows.

A simple linear controller can be used, with a proportional gain and a low-pass filter, which is required to avoid destabilizing the high-frequency poorly damped oscillatory mode

$$C(s) = \frac{K_p}{1 + sT}$$

In order to obtain a closed-loop time constant $\tau_c$ (the inverse of the crossover frequency), the gain must be chosen as

$$K_p = \frac{A}{q\tau_c}$$

i.e., equal to the inverse of the distance the bell would travel if inflated with the design volume flow $q_{des}$ for $\tau_c$ seconds. The time constant T of the low-pass filter must be 4-6 times smaller than $\tau_c$ to avoid reducing the phase margin too much. When the system operates at a sustained volume flow $q$, the static error of the bell height is

$$l = \frac{q}{q_{des}K_p}$$

It was found by simulation of a wide range of scenarios that choosing $\tau_c$ = 3 s gives satisfactory dynamic performance, with a static error of at most 40 mm, when 10 patients are attached. This was compensated by putting the set point 50 mm above the mid-point between the low and high position. Integral action could also be added to remove this static error, but is probably not really necessary.

The control valve must have a high rangeability, at least 1:30 or possibly even 1:50, since it sized for a maximum flow $q_{des}$ = 4 l/s, but must also operate reliably when a single patient is attached, which corresponds to a much lower flow of $q = 0.17$ l/s. Alternatively, a second smaller valve could be placed in parallel, with split range actuation, though this would increase the complexity and risk of failure of the system.

The bell level should preferably be measured with a contact-less sensor, to avoid any friction that could perturb the value of the $O_2$ pressure under the bell. An optical laser sensor is probably the best choice. At least two sensors should be installed to provide redundancy, since the correct measurement of the bell level is critical to the correct supply of oxygen to the patients.

An on-off valve is installed in parallel, which can take over the modulating valve in case it malfunctions. In this case, a simple on-off controller will be employed, which opens the valve when the bell gets close to the lower limit, and closes it when it gets close to the upper limit. Limit switches may be used instead of the optical sensor, to provide further redundancy against malfunctions.

The second control function is to provide $O_2$ to each patient according to the specification: 14 to 30 respiratory acts per minute and 0.2 to 0.5 l per act. In order to achieve the maximum operational flexibility and to avoid the critical dependency on the communication channel between each bed-side unit and the master controller, each bed-side unit is controlled independently. The physician selects a respiratory rate and a duty cycle for each patient, and a simple PWM signal generator drives the supply and discharge valves accordingly, independent from the other units. The system design is such that adequate supply pressure is guaranteed even in the worst possible condition. The respiratory rate and the duty cycle can be adjusted on an individual basis by the physician to change the indicated volume of each respiratory act, or possibly by some automatic control algorithm that adjusts them to achieve certain targets. In this study, we assume that these two parameters are fixed for each patient, for simplicity.

The supply and exhaust valves were sized at $K_v$ = 1.8 m3/h to avoid an excessive peak of flow at the beginning of the respiratory act, while ensuring a limited pressure drop across the valve, compared to the pressure drop across the pneumatic resistance of the patient's lungs. Such a flow coefficient also guarantees a reasonably limited flow out of the system in case the airtight connection to the patient is lost for any reason and the supply valve directly discharges into the atmosphere, ensuring that the other patients can still get their required $O_2$ flows.

The system was modelled using the equation-based, object-oriented Modelica modelling language. The complete source code of the all the system models is available as open source on https://github.com/looms-polimi/MEV. The models can be simulated with the open source OpenModelica software, see https://openmodelica.org.

The top-level view of the system is shown in the figure below:

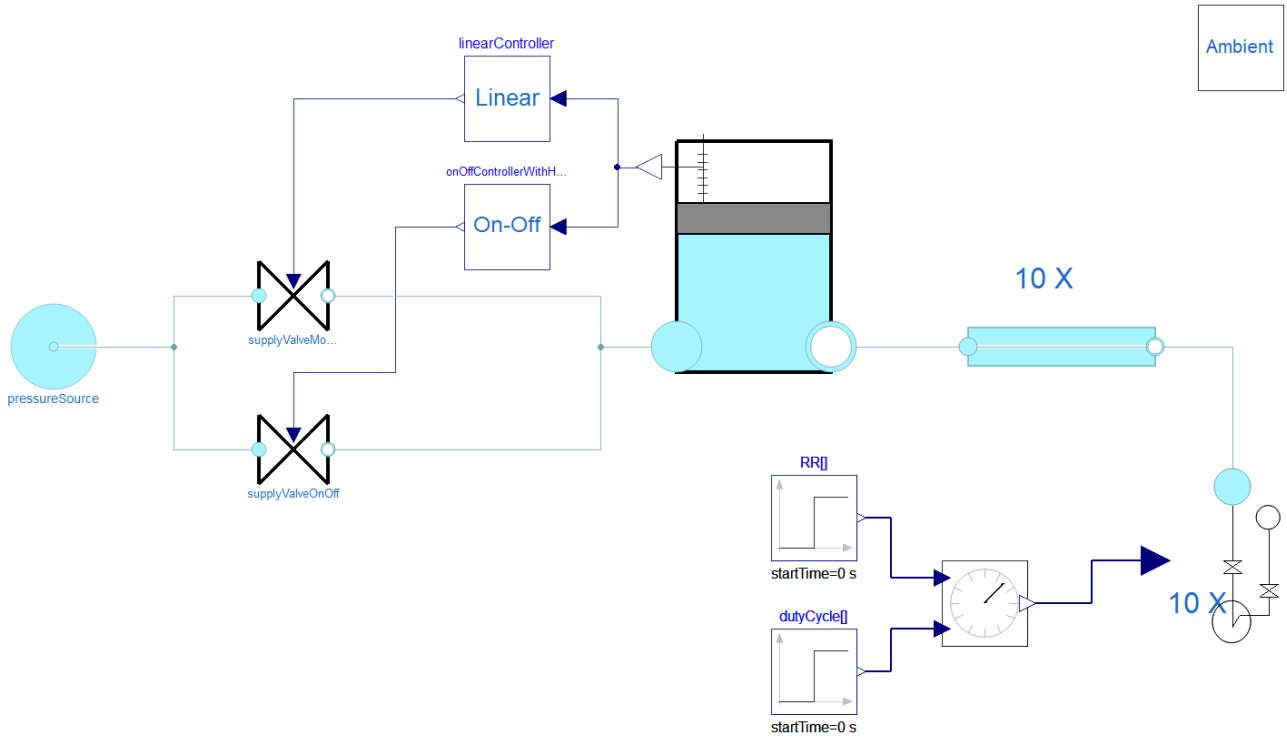


The bell jar model takes into account the air compressibility and the piston inertia, assuming a viscous friction coefficient corresponding to a damping coefficient $\xi$ = 0.02, as well as isentropic compressibility. The latter assumption is motivated by the fact that thermal transfer from the air to the walls cannot take place during the fast oscillation transients caused by the coupling between the bell inertia and the air compressibility, so if one wants to model that phenomenon accurately, an isentropic transformation is the best approximation.

Each pipe segment is modelled by a finite volume approximation, considering friction losses and mass storage due to air compressibility. In this case, air is considered as isothermal, since it is in good contact with the pipe walls that have a much higher thermal capacitance, so a detailed modelling of thermal phenomena is not necessary for the description of such a pneumatic system. The inertial term of the momentum equation is neglected, as it would lead to an explicit description of sound-wave propagation phenomena; given the length of the supply pipe, their characteristic time would be of the order of 50 ms, which is much faster than the time scale of interest for the controller design and for the description of operating transients.

A linear configuration with $N$ pipe segments and $N$ patients in a row was considered (default value $N = 10$), which is the worst case from the point of view of pressure losses. The pipe and patient models shown in the diagram are actually arrays of $N$ components; the first pipe inlet is attached to the bell jar outlet, while the outlet of each pipe is connected to the inlet of the next pipe, and each patient is attached to the end of one pipe segment. The ability of Modelica to handle arrays of components allows to change their number by simply changing the value of the $N$ parameter.

In the left part of the diagram, the oxygen supply is described as an ideal fixed pressure source, followed by the linear valve and the on-off valve connected in parallel to the bell jar inlet. A flag in the Ambient component dictates which of the two level controllers is activated.

Following a hierarchical object-oriented modelling approach, the patient models at the lower right corner of the system diagram are in turn described by the connection of components, shown in detail in the next figure. These include a linear pneumatic resistance $R$ ranging from 6 to 18 cmH20/(l/s), and a compliance $C$ ranging from 30 to 60 ml/cmH20, which are the ranges of values for intubated patients with different degrees of impairment of the respiratory function. The accidental disconnection of the pipe from the patient tube is modelled by a valve discharging into the atmosphere with a large flow coefficient, which is opened to simulate the accidental tube disconnection. The PEEP valve is modelled as a fixed-pressure sink at 12 cmH20 pressure. The compliance can breathe in a volume of from 0.36 to 0.72 l when the pressure ranges from the PEEP value to the supply value, so that those two values represent the limits of breathed air volume per respiratory act. The light blue circle to the left corresponds to the connector at the top of the patient's icon in the overall process diagram, which is then connected to the supply piping.

The two control valves are actuated in opposite phase: when the valveCommand signal is one, the inlet valve is open, admitting air into the patient's lungs, while a zero value of that signal opens the discharge valve to the PEEP.

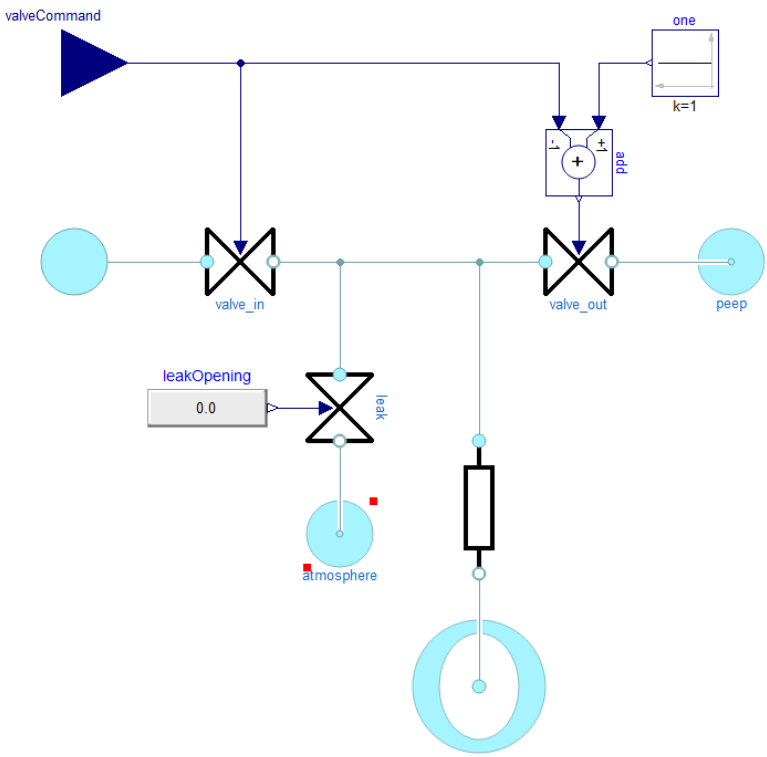

The control signals are generated by an array of PWM signal generators, fed by respiratory rate and duty cycle signal generators. For this study, the duty cycle is assumed to be constant, while the respiratory rate can be switched on from zero to a constant value, to simulate the connection of a new patient to the system.

The overall design of control and instrumentation was tested by running seven simulation scenarios twice, once with the linear controller, and once with the on-off backup controller. The scenarios are defined as follows:

1. The system is turned on with the bell at the lower level, gets pressurized, and then the first patient is attached at time = 10 in the middle of the supply pipe, position number 5. This transient shows the system startup behaviour, as well as the ability to work with zero or very low oxygen flow rate.
2. System operating with 5 attached patients, with a range of resistance and compliance values and with respiratory rates and duty cycles set to obtain an average breathing rate of 10 l/min each. The initial height of the bell is set slightly off the average steady-state value, to show the time constant of the level controller.
3. System operating with 10 attached patients, with a range of resistance and compliance values and with respiratory rates and duty cycles set to obtain an average breathing rate of 10 l/min each. The initial height of the bell is set slightly off the average steady-state value, to show the time constant of the level controller
4. System working with 9 attached patients of various types as before, one more is attached at time = 10. This case demonstrates the satisfactory operation when patients are added.
5. Worst-worst case in terms of distribution of the respiratory acts phases: all 10 patients have large compliance, low resistance, and have exactly synchronous inspiration acts, that all start at the same time. This is to show that the system can cope satisfactorily to extreme unbalancing of the oxygen flows going to each patient.
6. Ten patients attached, at time = 0 the leak on the last patient is activated, modelling an abrupt disconnection of the patient tube without a corresponding switch-off of its $O_2$ supply valve. This is to show that adequate pressure and volumes can be provided to the remaining 9 patients in the unfortunate occurrence of such a fault.
7. Twenty patients attached. This is to demonstrate that the system can also work with 2X the design number of patients in case of emergency, though of course in this case the safety margins are severely reduced.

For each scenario, the following variables are shown:

- Level of the bell jar in mm, with lower limit at 0 mm and upper limit at 170 mm
- Value of the supply pressure at the first (blue), fifth (red), and tenth (yellow) patient bed, in cmH20.
- Breathed volumes of each patient, in liters.
- Opening of the main supply valve in p.u.

The seven scenarios are simulated first with the linear controller, and then with the on-off controller.

In all studied cases, the performance is within specification.

1. The bell jar level is always safely far from the minimum and maximum levels, 0 and 170 mm, respectively.
2. The cumulated breathed volumes for all patients are all around 10 l/min, considering that the patients with impaired compliance and higher resistance are subject to faster respiratory rates and higher duty cycles to compensate for the reduced breathed volume during each respiratory act.
3. During normal operation, the bed-side supply pressure never deviates more than 2 cmH20 from the 24 cmH20 reference value, when the linear controller is used, and more than 3 cmH20 when the on-off controller is used.
4. Even in the very unlikely worst case of 10 patients with comparatively good respiratory conditions all breathing in a synchronous fashion, the pressure drops by 6 cmH20 after 50 ms from the start of the simultaneous respiratory acts, but is already restored to within 2 cm H20 from the set point after 100 ms, thus not substantially impairing the capability to provide the required oxygen supply to all patients.

Points 3. and 4. suggest that for all practical purposes, the system behaves as if an almost steady supply of oxygen at 24 cmH20 relative pressure was provided at each bed side. Thus, the only serious limitation compared to individual respirators is that this pressure value cannot be adapted individually for each patient. It is however possible to tune it for all patients, by adding or removing some weights from the bell top.

The operation when using a linear controller is of course smoother and closer to nominal than the operation with the on-off valve. The latter is however acceptable for backup operation in case of failure of the main valve actuator.

The reported scenarios allow to conclude that the simple control strategy proposed in this report is effective in providing satisfactory operation in all conceivable operating scenarios, including the main valve failure and the accidental disconnection of a patient tube. The control laws are fully decentralized, so they do not depend on the communication between bed-side units and the main control unit of the bell jar to function properly. Furthermore, they can be easily implemented in standard embedded controller hardware, without any need of high-performance computations.

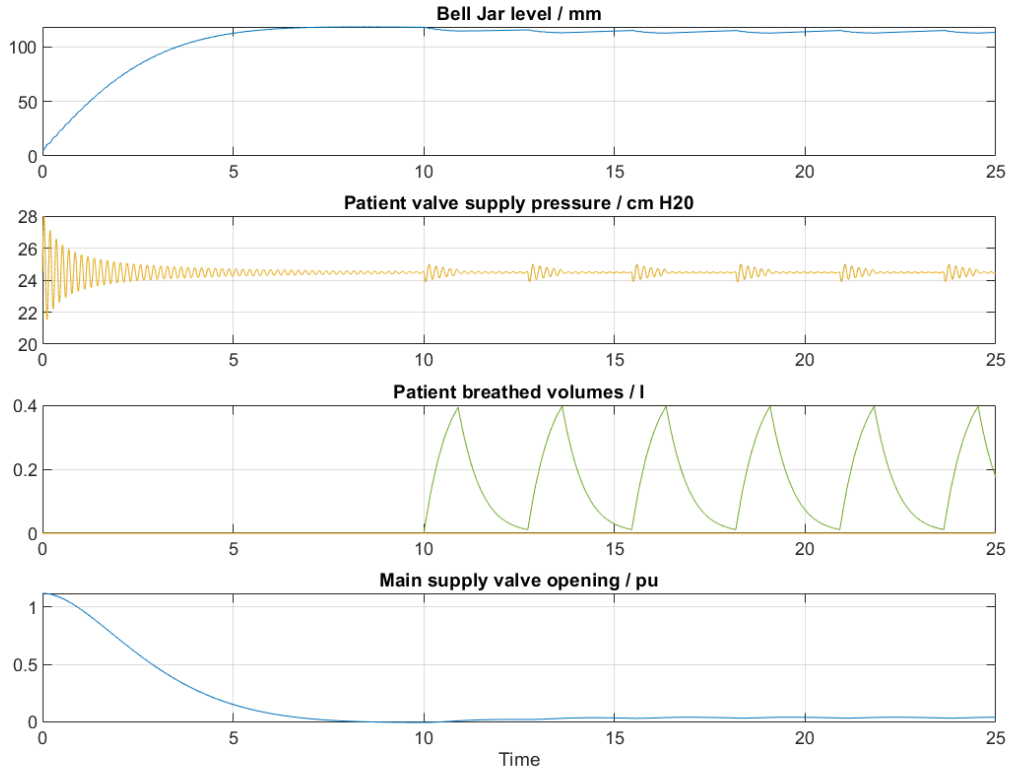


Scenario 1, startup and one patient attached, linear controller

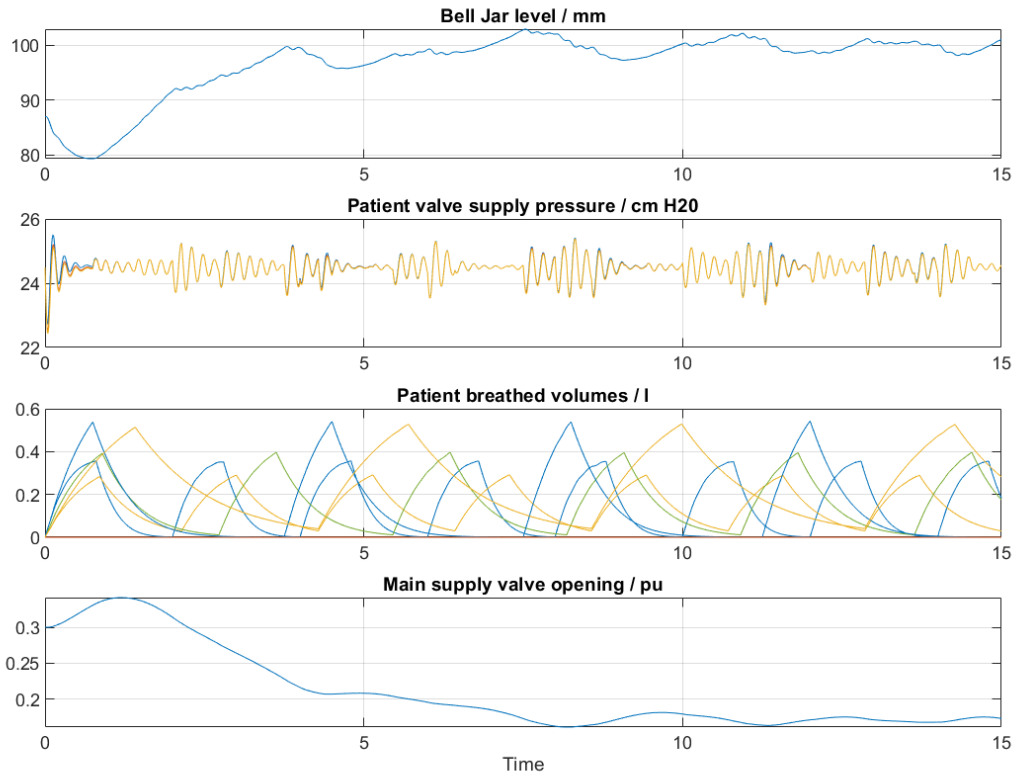


Scenario 2, five patients attached, linear controller

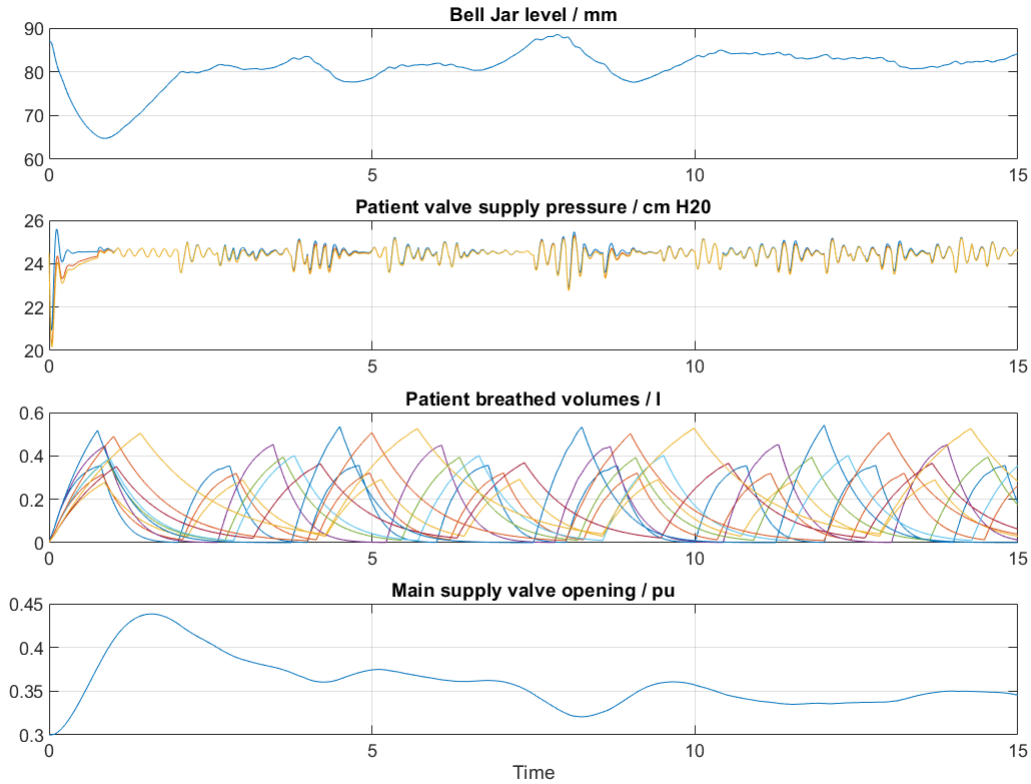


Scenario 3: 10 patients attached, linear controller

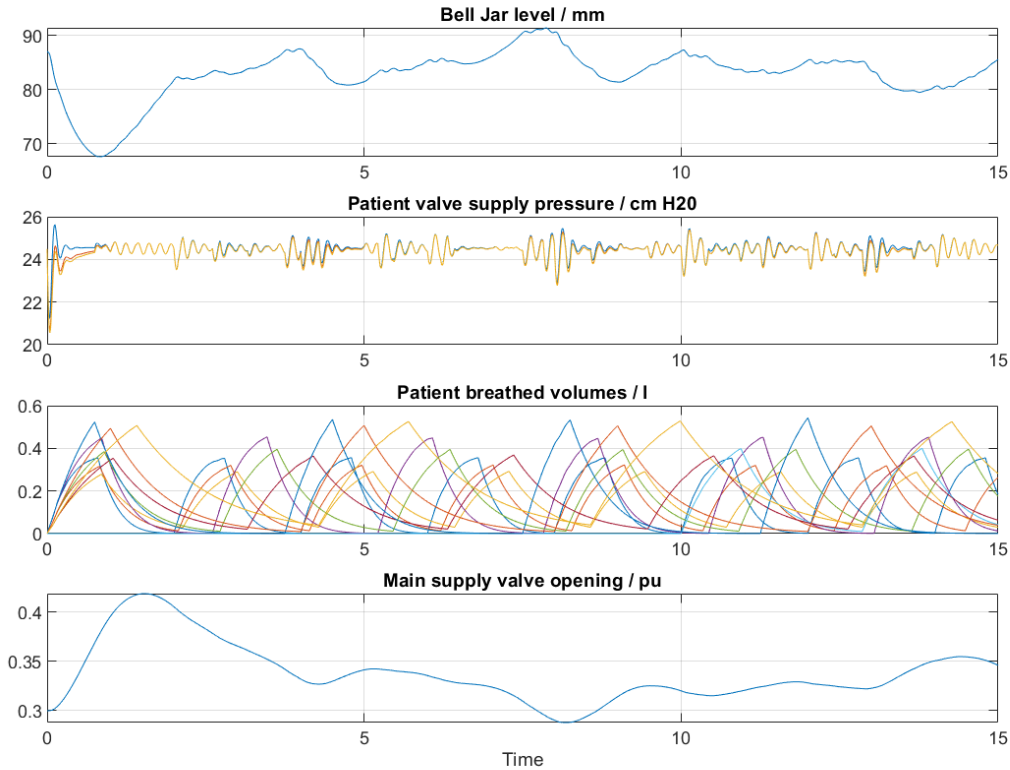


Scenario 4: 9 patients attached, one more attached at time = 10, linear controller

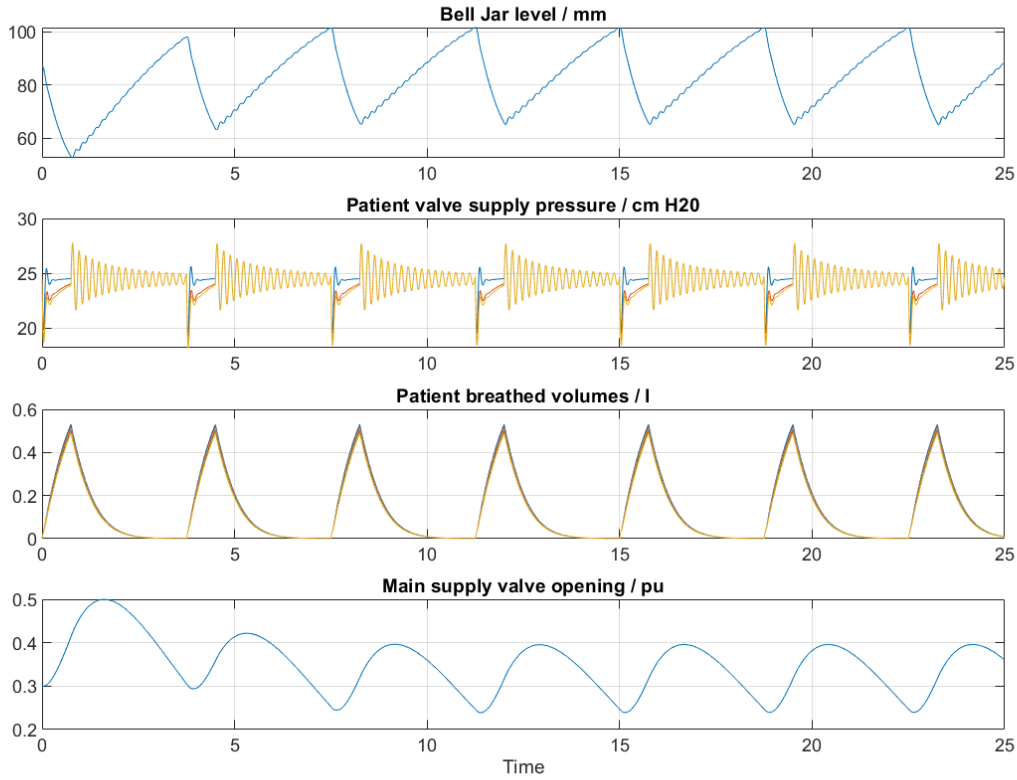


Scenario 5: 10 patients attached, all in phase with each other, linear controller

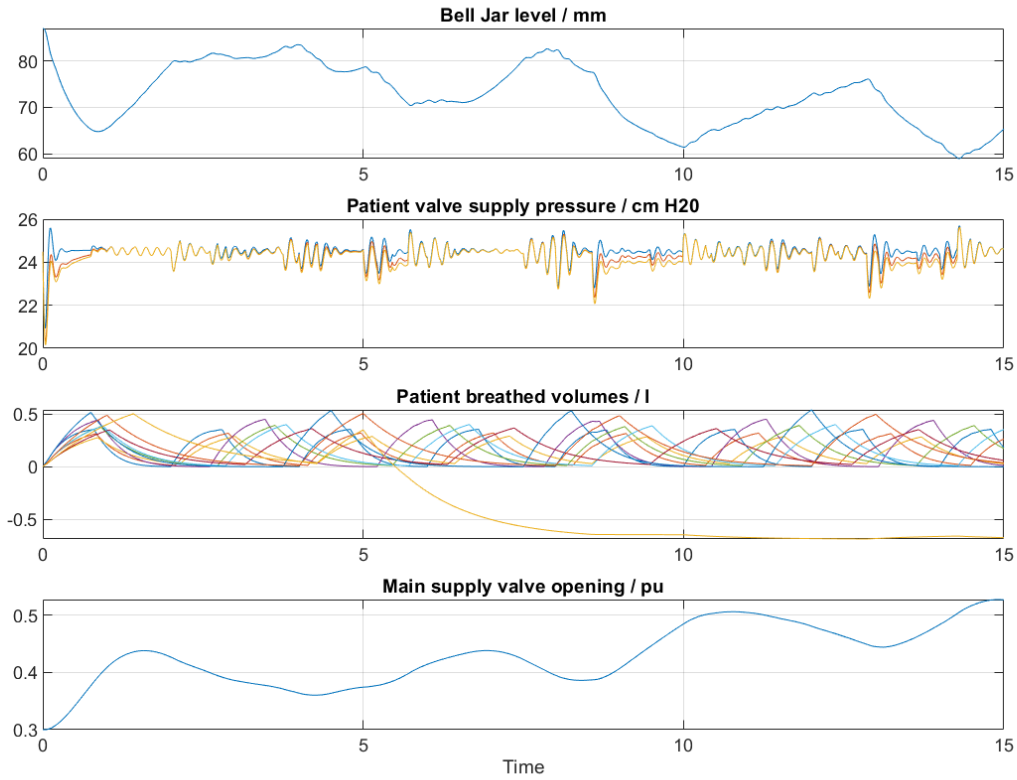


Scenario 6: 10 patients attached, at time = 0, one is detached without switch-off, linear controller

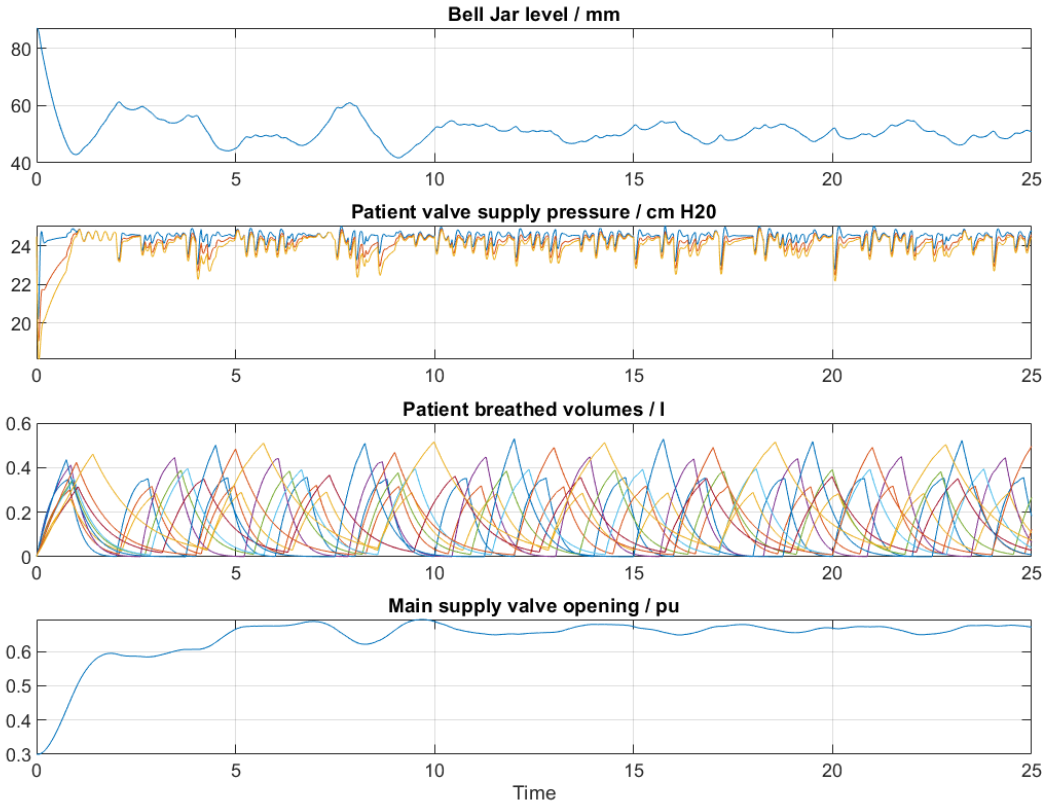


Scenario 7: 20 patients attached, linear controller.

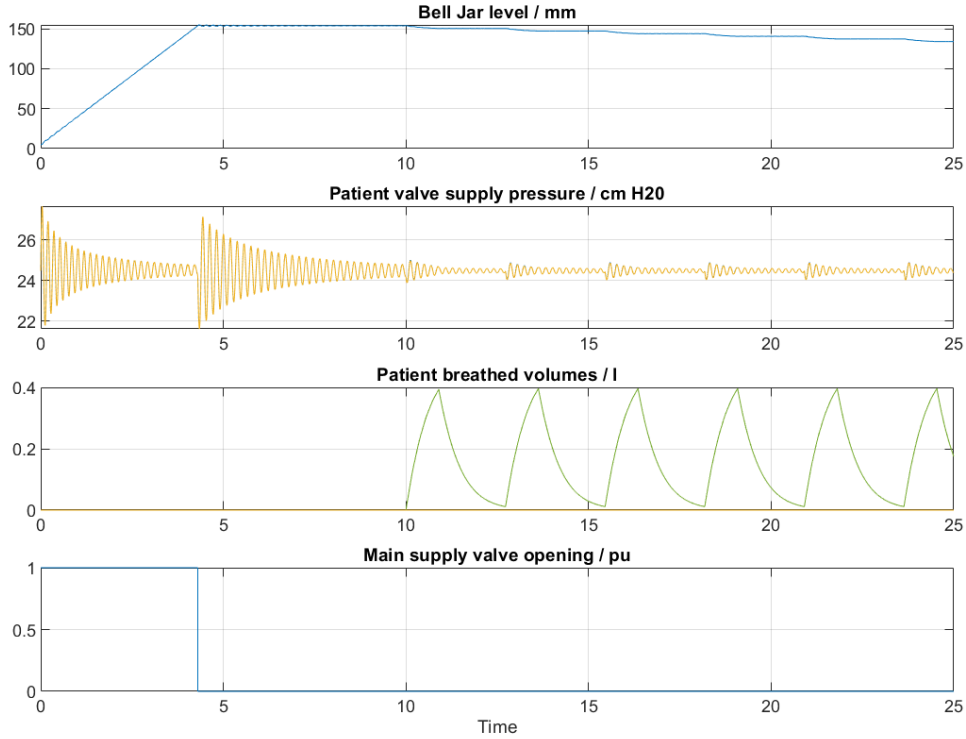


Scenario 1: System startup and first patient attached at time = 10, on-off controller

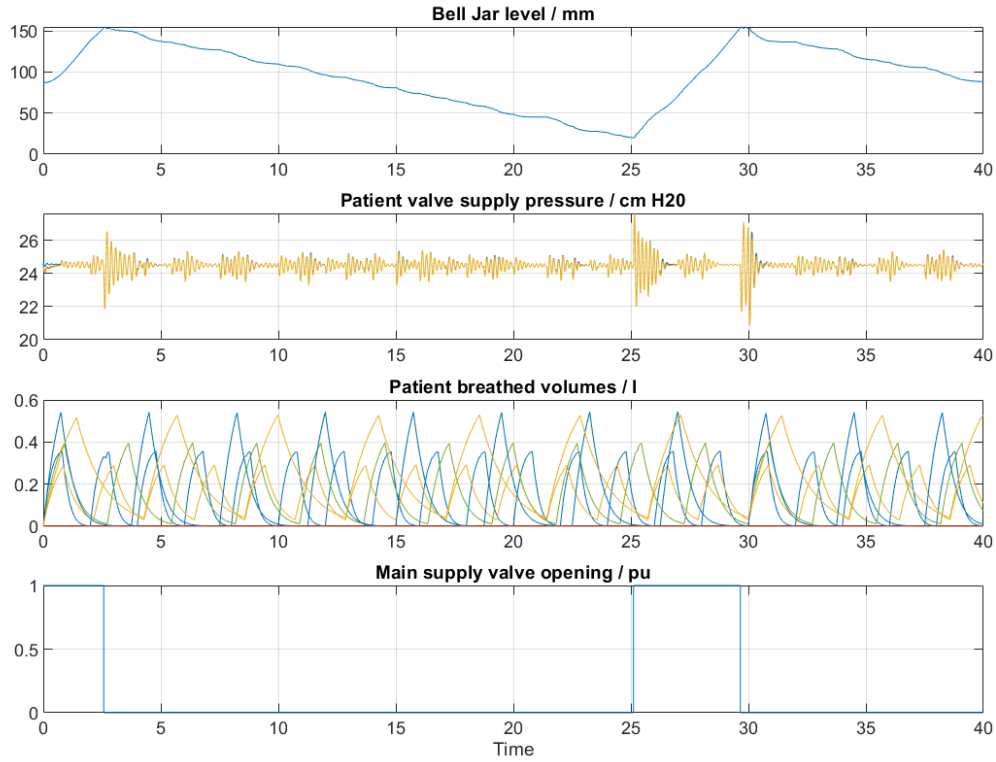


Scenario 2: 5 patients attached, on-off controller

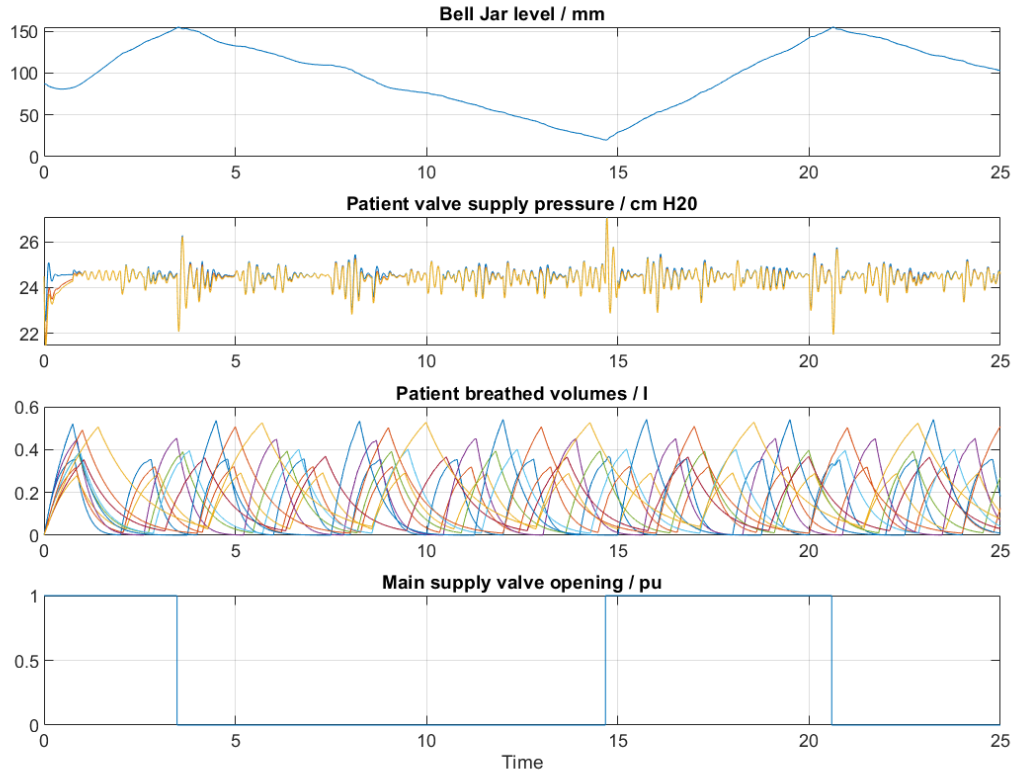


Scenario 3: 10 patients attached, on-off controller

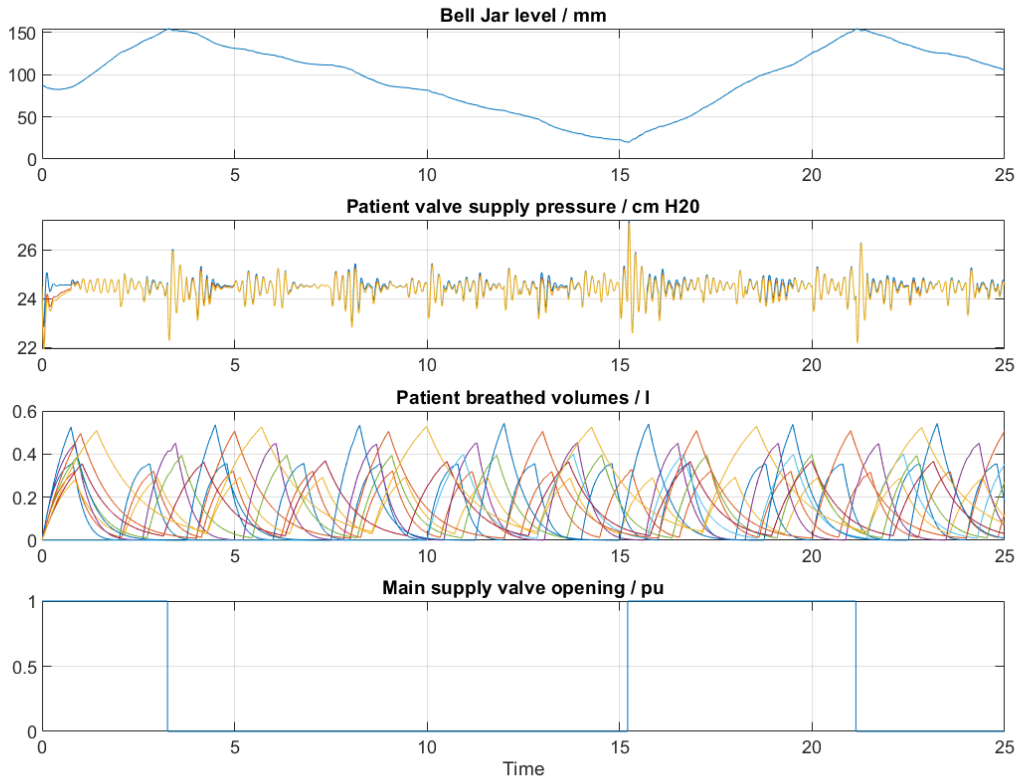


Scenario 4: 9 patients attached, one more attached at time = 10, on-off controller

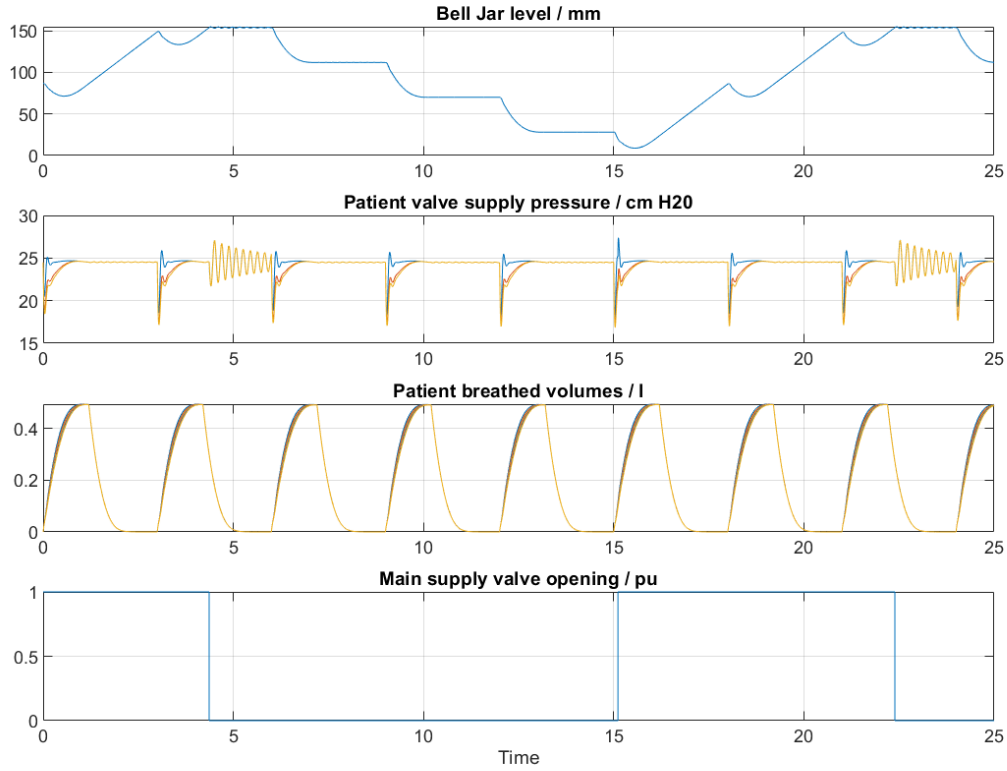


Scenario 5: 10 patients attached, all in phase with each other, on-off controller

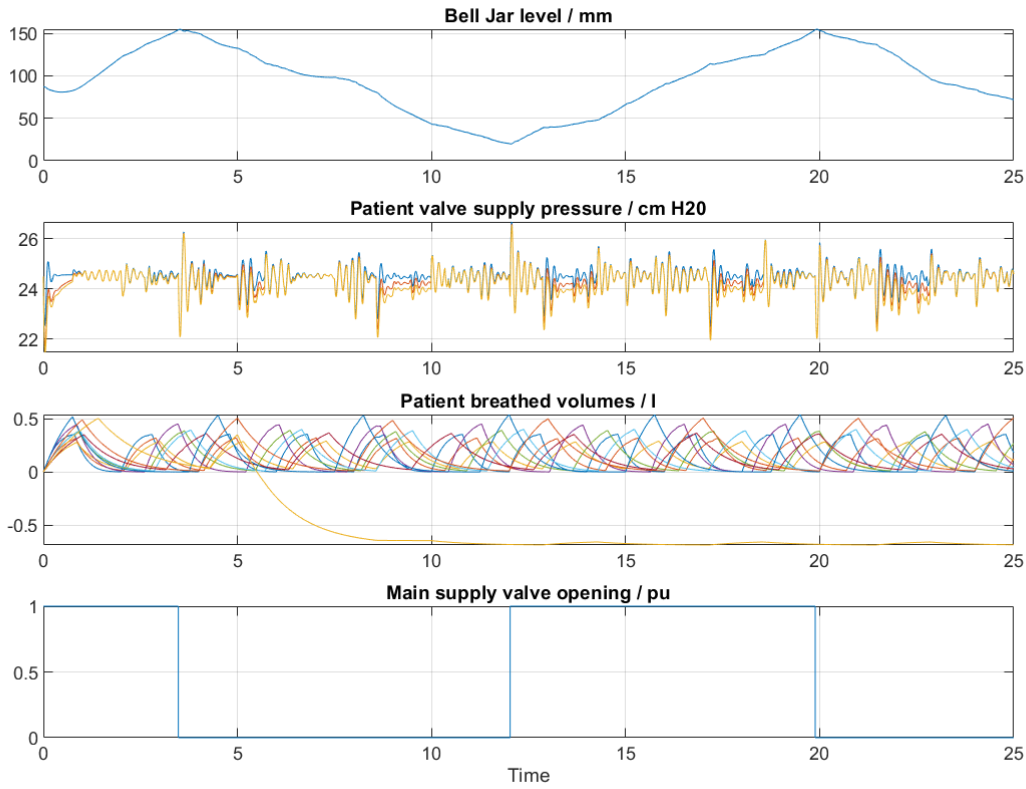


Scenario 6: 10 patients attached, at time = 0, one is detached without switch-off, on-off controller

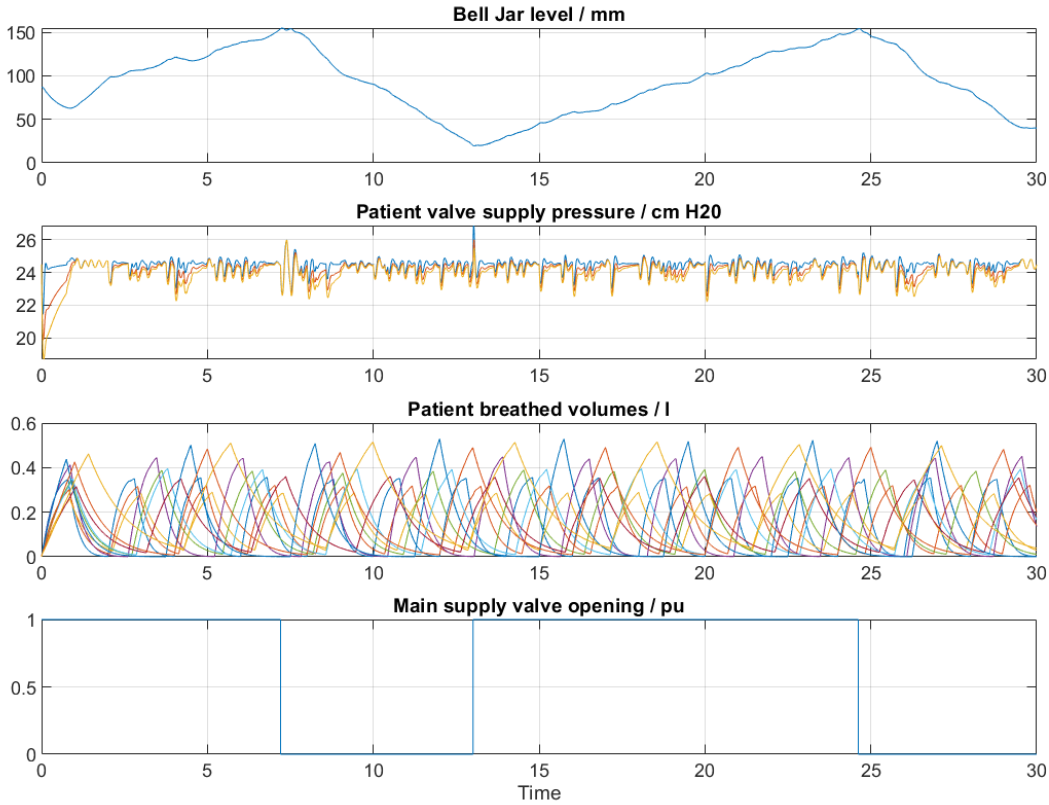


Scenario 7: 20 patients attached, on-off controller

## ACKNOWLEDGMENTS

This instant project started on March 19th 2020 and was first reported on March 31st 2020, with later updates on April 16th 2020 and on February 28th, 2021. It was carried out with high commitment, specialized skills, and open mind towards the other disciplines involved. No financial support was given nor asked. Since the very beginning it was decided to volunteer for an open contribution for a potentially life-saving system.

All authors acknowledge the immediate support by the addressee of this report, Antonio Pesenti and Ferruccio Resta. GB wishes to warmly thank all suggestions and encouragements given by: Marc Garbey (Methodist Hospital, Houston, TX) who solicited attention on standard ventilators adapted to supply more patients, thus giving the seed for the new MEV concept; Thomas Langer (Grande Ospedale Metropolitano Niguarda, Milano, Italy and School of Medicine and Surgery, University of Milano-Bicocca, Monza, Italy), who immediately created the connection to Alberto Zanella, thus starting the joint project; Carlo Maria Badi (former, now retired, Head of Engineering, Grande Ospedale Metropolitano Niguarda, Milano) for precious clinical engineering suggestions.

The need for a simple and robust system pushed the authors to the reappraisal of old technologies, now obsolete and substituted by more sophisticated ones: "*The art of our necessities is strange, That can make vile things precious" (King Lear, Act III, Scene II).*